*SERVICE MANUAL*

*Machine: U AC Power Plus*

*Manual nr: 005954*

*Edition 2008B*

# General information and technical data


**1.1 Introduction ..... 1.1**
1.1.1 Service manual ..... 1.1
1.1.2 The trucks ..... 1.1

**1.2 Manual structure ..... 1.2**
1.2.1 Symbol key ..... 1.2
1.2.2 History ..... 1.3

**1.3 Safety ..... 1.4**
1.3.1 Lifting points ..... 1.4
1.3.2 Safety instructions ..... 1.5
1.3.3 Environmentally hazardous waste - environment ..... 1.5
1.3.4 Handling ..... 1.6
1.3.5 Trouble shooting ..... 1.6

**1.4 Designations ..... 1.7**
1.4.1 Truck types ..... 1.7

**1.5 Dimension ..... 1.13**
1.5.1 Dimension description UNS, UHS ..... 1.13
1.5.2 Dimension description UFS ..... 1.14
1.5.3 Dimension description USS ..... 1.15
1.5.4 Dimension description URF ..... 1.16

**1.6 Component specification ..... 1.17**
1.6.1 Drive motor ..... 1.17
1.6.2 Electric brake ..... 1.17
1.6.3 Gearbox ..... 1.17
1.6.4 Hydraulic unit ..... 1.18
1.6.5 Control system for motor ..... 1.18
1.6.6 Battery ..... 1.19
1.6.7 Servo motor ..... 1.19
1.6.8 Steering servo unit “fly by wire” ..... 1.19
1.6.9 Steering servo unit EPS 2001 ..... 1.19

**1.7 Torque ..... 1.20**
1.7.1 Conversion table torque ..... 1.20
1.7.2 Bolt types and tensile grades ..... 1.21

**1.8 Lubrication ..... 1.23**
1.8.1 Lubrication chart UNS, UNN, UHS, USS, UFS ..... 1.23
1.8.2 Lubrication chart URF ..... 1.24
1.8.3 Symbol key lubrication chart ..... 1.25

**1.9 Recommended oil and grease types ..... 1.26**
1.9.1 Recommended changing ..... 1.26

**1.10 Code explanations ..... 1.27**
1.10.1 Machine colours according to NCS ..... 1.27
1.10.2 Colour codes for Atlet's wiring diagrams ..... 1.27
1.10.3 Designations for electrical components ..... 1.28
1.10.4 Units ..... 1.29

*Edition 2008B*

# 1 General information and technical data

## 1.1 Introduction

### 1.1.1 Service manual

The manual describes the service procedures on ATLET reach trucks in the U** AC Power Plus range. Use the manual for quick and correct service of respective truck models.

The manual describes models manufactured from the introduction of Mark 2 at the end of 1999.

You may find contradictions in the manual compared to the models supplied due to optional designs and the like.

***Warning!***

**If the truck is rebuilt after delivery or supplemented in such a manner that safety may be affected, ATLET AB or its representative should be contacted.**

The content of this manual is protected by copyright law and may not be copied, fully or in part, without written permission. The material has undergone careful examination with regard to correctness. Subject to alteration.

In the event of inconsistent information in the Swedish and translated editions, it is the Swedish edition that applies.

Modifications and updates will be distributed via ATLET AB Service Manual Change.

### 1.1.2 The trucks

The new generation of reach trucks in the U** AC Power Plus range have a new exterior design and new content. The trucks have been developed with the focus set on the driver's working environment and a completely new driver environment with improved ergonomics.

New time saving solutions reduce the time required for servicing. The drive motor, hydraulic motor and all service points are easily accessible. The trucks are also equipped with truck computer,which facilitate trouble shooting.

# 1.2 Manual structure

The manual is arranged according to the same principles as the Atlet's spare part catalogues, i.e. a system consists of 12 tabs, where tabs 4 - 12 contains information limited to a specific part of the truck. For example, Masts (section 6) and Hydraulic System (section 8). Tabs 1 - 3 in this manual contain more comprehensive information regarding technical data, general service instructions and tools.

For specific problems or information about procedures, look in the list of contents for the correct section.

## 1.2.1 Symbol key

***Warning!***

**Used with risk of personal injury.**

***Important!***

**Used with the risk of damage to the machine.**

***Note!***

**Used for general observation.**

## 1.2.2 History

This service manual covers all variants in the U** AC Power Plus truck series manufactured since the end of 1999. Note that there may be parallel sections applicable for U** AC Power Plus trucks for different dates of manufacture and variants. See the table below.

**Table 1.1**

| Chassis no. | Event | Truck type |
|---|---|---|
| >2000 | Mark 2:<br>Improved ergonomical design introduced.<br>Trucks manufactured before this event are not described in this service manual.<br>140, 160: New mast system introduced. | UFS |
| >2000 | | UHS |
| >1000 | | UNN |
| >4000 | | UNS |
| >2000 | | URF |
| >2000 | | USS |
| >2500 | Steering:<br>EPS steering introduced. | UFS |
| >2500 | | UHS |
| >1500 | | UNN |
| >4500 | | UNS |
| >2500 | | URF |
| >2500 | | USS |

# 1.3 Safety

## 1.3.1 Lifting points

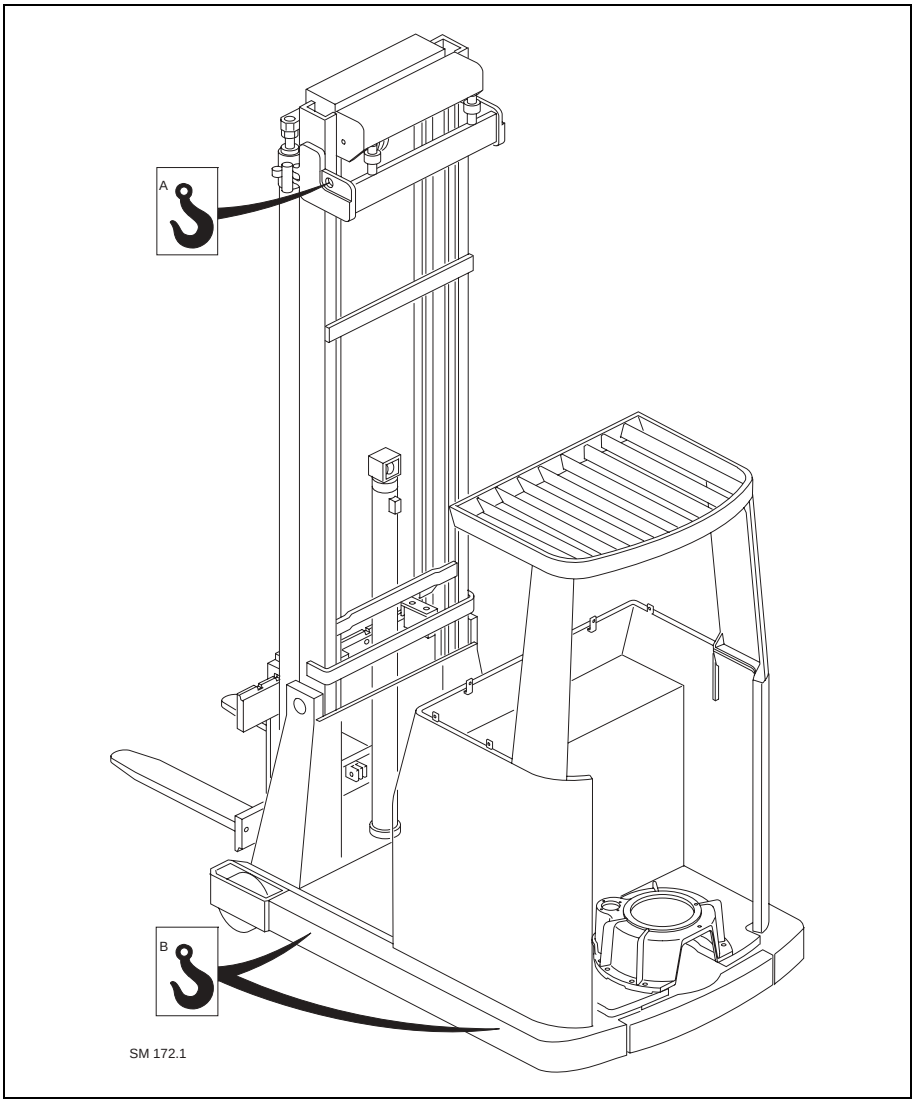


**Figure 1.1**

The figure above shows where the permitted lifting points are placed on the truck. The lifting points are marked with a decal representing a lifting hook. When only lifting the mast, the lifting holes to the outer mast are to be used (point A). When lifting the entire truck, use the lifting points in the frame (point B).

***Warning!***

**The machine must never be lifted from the overhead guard.**

### 1.3.2 Safety instructions

- When the truck is lifted using a jack, make sure you secure it with blocks. The truck must not rest on the jack, while work is carried out.
- Ensure that straps, wires or chains have a sufficient lifting capacity before lifting the truck.
- Pull out the plug and wait 2 minutes before starting work on the electrical system. See the warning sign.
- Ensure that the drive wheel runs free of the floor before trouble shooting.
- The system should not be pressurised, e.g. the pump motor shut off and the forks down, when dismantling parts of the hydraulic system.
- For welding work the battery plug is always to be disconnected along with all connections to the truck computer box, servo unit and regulators (applies to all electronic units). Following completion of the welding work, all contactors are to be connected to the truck computer box first, followed by connection of the battery plug.
- Persons must not be in the area between the mast and the machine housing if the battery plug is connected.

***Warning!***

**Operation of the electrical emergency switch does not make the truck completely dead.**

### 1.3.3 Environmentally hazardous waste - environment

Atlet AB takes care of the environment. Waste material in conjunction with repairs, maintenance, cleaning, or scrapping, should be collected and disposed of in an environment-friendly way and in accordance with the directives of respective countries. Such work must only be carried out in areas intended for this purpose.

Environmentally hazardous waste, such as oil filters, batteries, hydraulic hoses and electronics, can have a negative effect on the environment, or health, if handled incorrectly. Recyclable material should be taken care of by specialised authorities.

### 1.3.4 Handling

- Make sure that you have all the essential tools close at hand before starting work.
- Before cabling or other electrical components are disconnected, check the colour codes and check for damage to cables or connections.
- When complex, complete components are repaired and need to be dismantled ensure that you have good control of the different component parts so that confusion is avoided.
- When repairing or maintaining sensitive components, make sure that you use clean tools and work on a clean work surface.
- Dismantle, inspect and adjust components according to the prescribed routines. See respective sections for detailed information.
- Ensure gaskets, O-rings, etc are replaced with new parts each time they are dismantled.
- Always use Atlet's original spare parts. Those persons using non approved spare parts accept, without exception, full responsibility for any damage. Hydraulic hoses should be kept so that they do not age too quickly.
- Use the screws and bolts specified in the spare parts catalogue. Tighten according to instructions. In those cases where the tightening torque is not stated, refer to the table of standard tightening torque see section 1.7 Torque.

### 1.3.5 Trouble shooting

When you suspect a faulty component, do not replace it immediately. First check the surrounding equipment and carry out complete trouble shooting routines. Make sure you know the reason for the fault before replacing a component.

# 1.4 Designations

## 1.4.1 Truck types

| | | | | | |
|---|---|---|---|---|---|
| Truck type: | UNS | | | | |
| | UNN | | | | |
| | UHS | | | | |
| | UFS | | | | |
| | URF | | | | |
| | USS | | | | |
| Designa-tions: | | U = Reach truck | N = Normal | RF = Rotating forks | |
| | | S = Standard | H = High lift | | |
| | | S = Narrow (second letter) | F = Four way | | |
| Load capacity: | UNS: | | 1400 kg | 1600 kg | 2000 kg |
| | UHS | | 1400 kg | 2000 kg | |
| | UNN | | 1400 kg | | |
| | USS | | 1400 kg | | |
| | UFS | | 2000 kg | 2500 kg | |
| | URF | | 1250 kg | 1500 kg | |
| Frame type: | UNS | 140 | 160 | 161 | 141 | 200 |
| | UNN | 140 | | | | |
| | UHS | 141 | 200 | | | |
| | USS | 141 | | | | |
| | UFS | 200 | 201 | 250 | | |
| | URF | 125 | 150 | | | |

| | | | | | |
|---|---|---|---|---|---|
| Battery types: | UNS/UHS: | | R | M | X |
| | URF | | X | M | |
| | R = Reach, M = Motor powered battery rollers, X = Battery on rollers | | | | |
| Battery size: | UNS, UFS | C | E | F | G |
| | UNN | | E | | |
| | UHS, | | E | F | G |
| | USS | C | E | F | |
| | URF | | | | G |

| | | |
|---|---|---|
| Battery capacity: | C: | Circa 450 Ah/48 V |
| | E: | Circa 600 Ah/48 V |
| | F: | Circa 750 Ah/48 V |
| | G: | Circa 900 Ah/48 V |

**Type designations** (example):

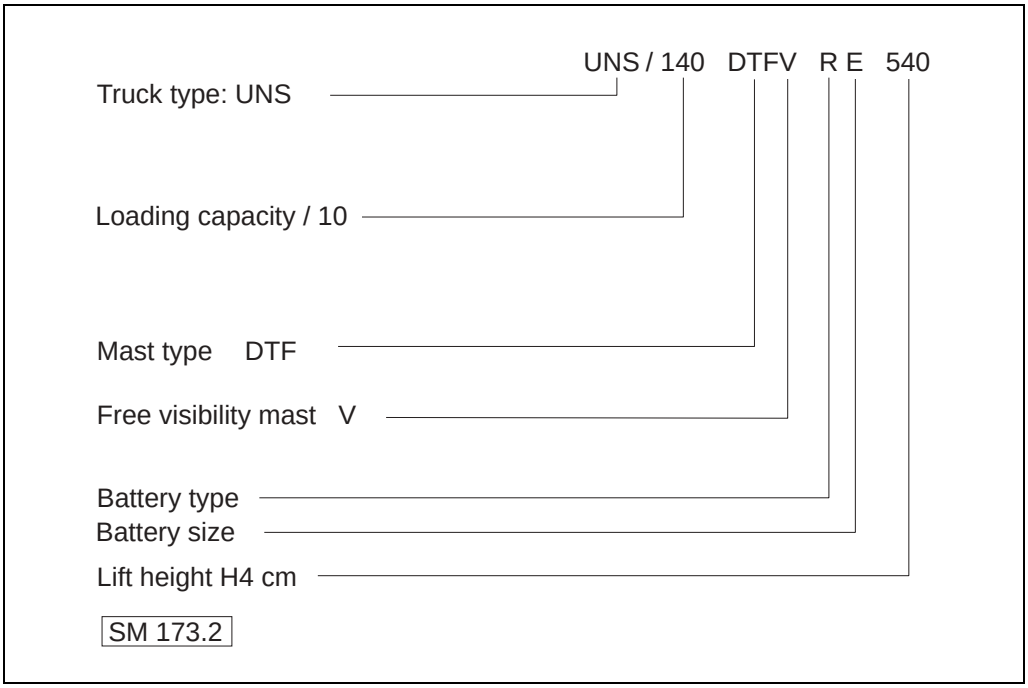


**Figure 1.2**

## Type plate

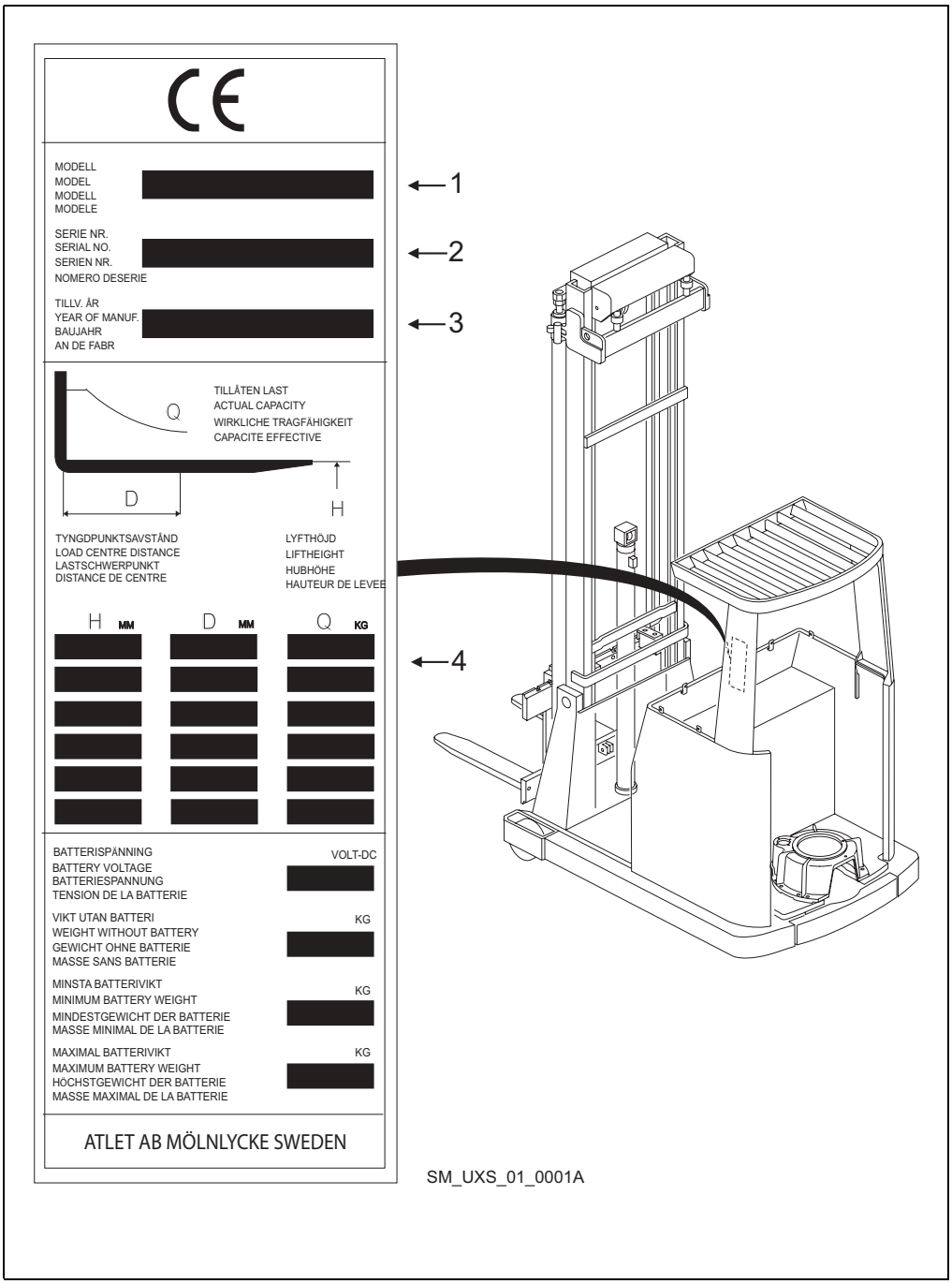


**Figure 1.3** Example of type plate (–2006w36)

1. Model designation.
2. Type Series no./Version (S=Special version.).
3. Year of manufacture, week, and warranty period in months (only Sweden). (On the assumption that the service instructions in the warranty regulations are followed.)
4. Any load restrictions, depending on the position of the load on the forks (D) and/or lifting height (Q).

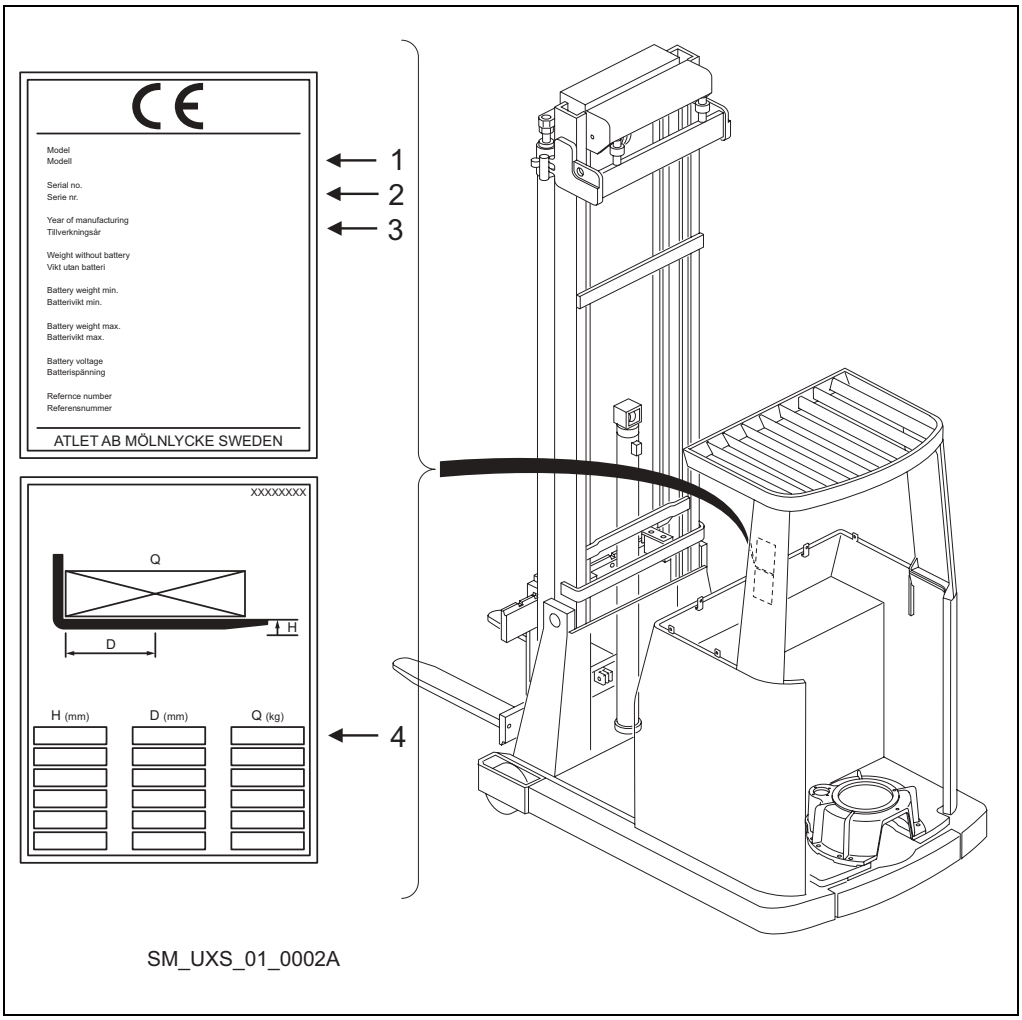


**Figure 1.4** Example of type plate (2006w37–)

1. Model designation.
2. Type Series no./Version (S=Special version.).
3. Year of manufacture, week, and warranty period in months (only Sweden). (On the assumption that the service instructions in the warranty regulations are followed.)
4. Any load restrictions, depending on the position of the load on the forks (D) and/or lifting height (Q).

***Note!***

**In cases where the machine plate has been lost or become illegible, it must be renewed immediately. In order to identify the machine's serial number, there is a plate located on each main component such as drive motor, gearbox, hydraulic unit, TMC etc. For some machines there is even a plate attached inside the battery compartment, or serial number punched on the side of the mast.**

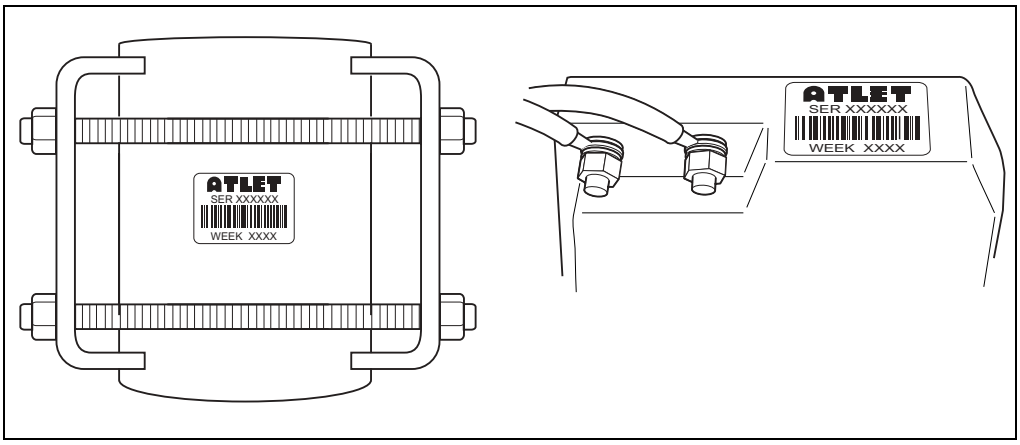


**Figure 1.5** Example of plate with serial number.

| Available battery combinations | | | | | | | | | | |
|---|---|---|---|---|---|---|---|---|---|---|
| | RC | RE | RF | RG | | XC | XE | XF | XG | XF M |
| | | | | | | | | | | |
| UNS 140 | X | X | | | | X | X | | | |
| UNS 160 | | X | X | | | | X | X | | |
| UNS 141 | X | X | X | | | X | X | X | | |
| UNS 200 | X | X | X | X | | X | X | X | X | X |
| UHS 141 | | X | X | | | | X | X | | |
| UHS 200 | | X | X | X | | | X | X | X | X |
| UNN 140 | | X | | | | | | | | |
| USS 141 | X | X | X | | | X | X | X | | |
| URF 125 | | | | | | | | | X | X |
| URF 150 | | | | | | | | | X | X |
| UFS 200 | X | X | X | X | | X | X | X | X | X |
| UFS 201, 250 | | X | X | X | | | X | X | X | X |

# 1.5 Dimension

## 1.5.1 Dimension description UNS, UHS

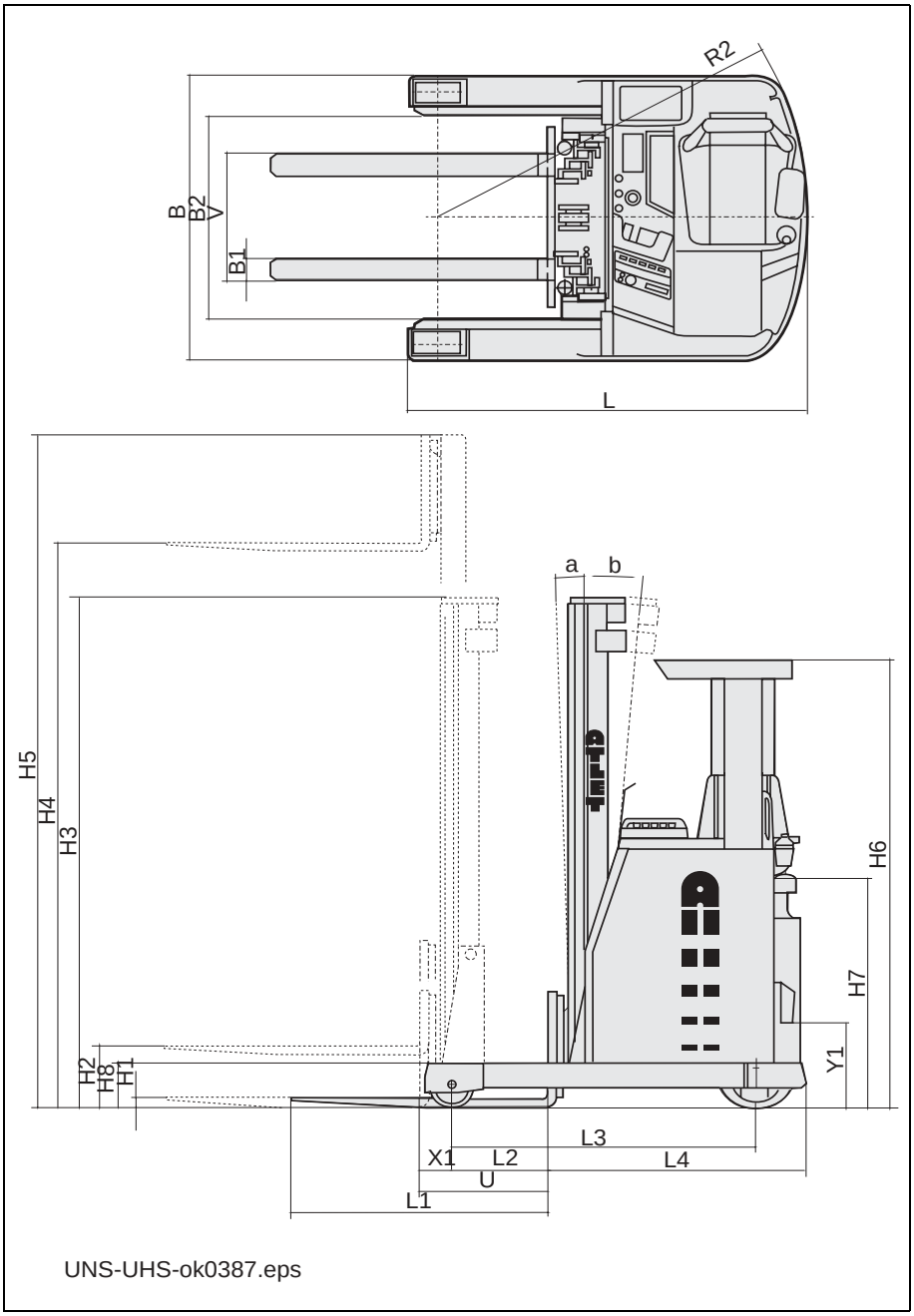


**Figure 1.6**

## 1.5.2 Dimension description UFS

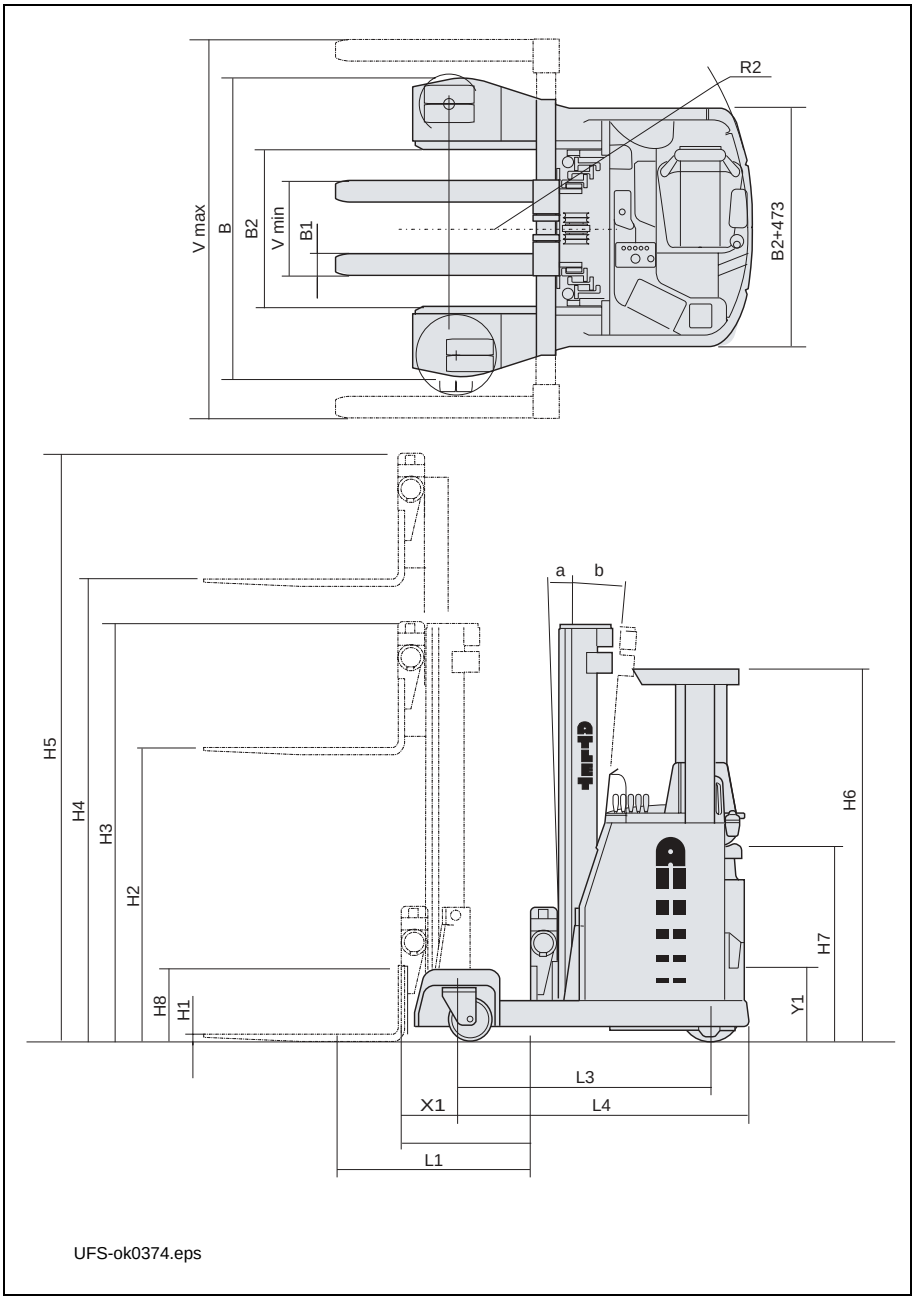


**Figure 1.7**

## 1.5.3 Dimension description USS

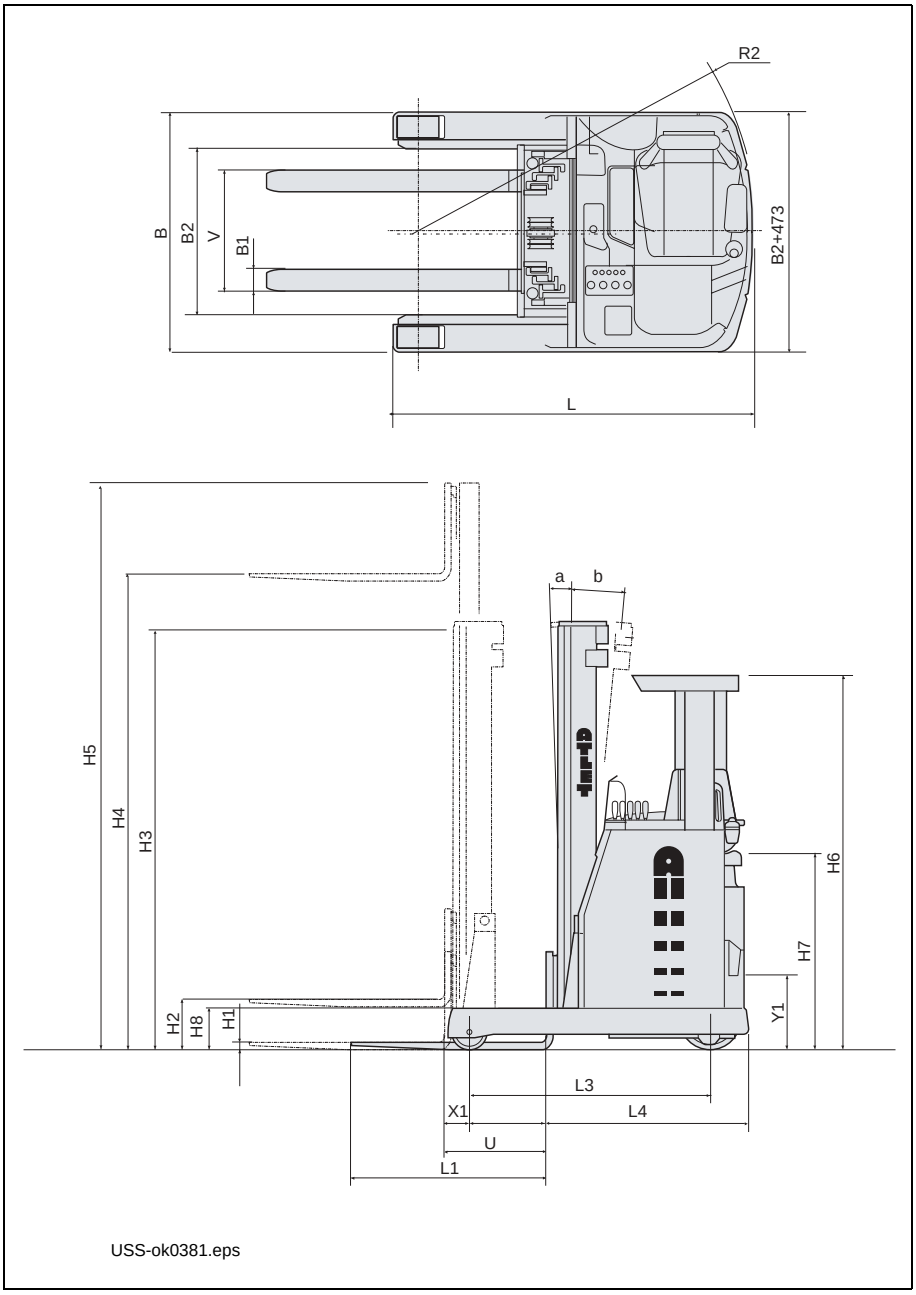


**Figure 1.8**

## 1.5.4 Dimension description URF

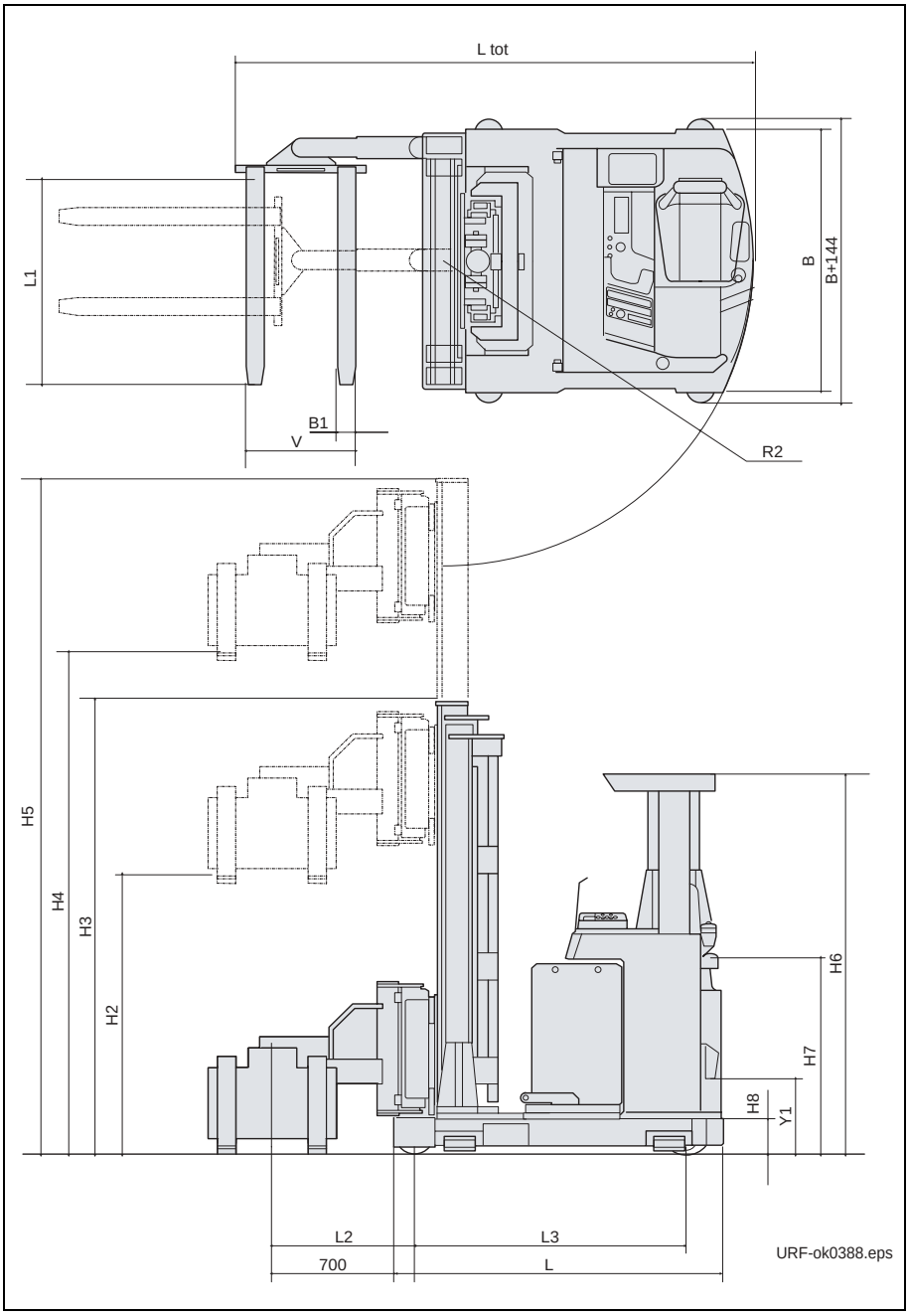


**Figure 1.9**

# 1.6 Component specification

## 1.6.1 Drive motor

(Also see section 5, Drive motor)

The following drive motor is in the truck models UNS, UHS, USS, UFS, URF:

| | |
|---|---|
| Manufacture | Elmo |
| Output | 7.5 kW, S3 60% at 2500 rpm |

The following drive motor is in the truck model UNN:

| | |
|---|---|
| Manufacture | Elmo |
| Output | 6 kW, S2 60% at 2500 rpm |

## 1.6.2 Electric brake

UNS, UHS, UFS, URF (See also section 5, Electric brakes)

| | |
|---|---|
| Manufacture | Lenze (1 step 1 disc) |
| Braking torque | 125 Nm |

UNN (See also section 5, Electric brake)

| | |
|---|---|
| Manufacture | Lenze (1 step 1 disc) |
| Braking torque | 80 Nm |

## 1.6.3 Gearbox

(See also section 5, Gearbox)

| | |
|---|---|
| Manufacture | Kordel |
| Gear ratio | 18.37:1 |
| Oil volume | 3.5 l |
| Oil type | See section 1.8 |

## 1.6.4 Hydraulic unit

(See also section 8, Hydraulic unit.)

The following hydraulic unit is in the truck models UNS, UHS, USS, UFS, URF:

| | |
|---|---|
| Motor/Pump | |
| Manufacture | Elmo / Eckerle |
| Output | 14 kW, S3 15% at 2300 |
| Max pressure | Circa 190 bars |
| Working pressure | Circa 170-185 bars |
| Flow | 13.3 $cm^3$/r |
| Tank volume | Max 34 l |
| Oil type normal environment | See section 1.9 |

The following hydraulic unit is in the truck model UNN:

| | |
|---|---|
| Motor/Pump | |
| Manufacture | Elmo / Eckerle |
| Output | 10 kW, S3 15% at 2300 |
| Max pressure | Circa 190 bars |
| Working pressure | Circa 170-185 bars |
| Flow | 10.9 $cm^3$/r |
| Tank volume | Max 34 l |
| Oil type normal environment | See section 1.9 |

## 1.6.5 Control system for motor

The following control system is in the truck models UNS, UHS, USS, UFS, URF:

| | |
|---|---|
| Manufacture | Inmotion |
| Type | ACS4811-83R09027A |
| Voltage | 48 V |

The following control system is in the truck model UNN:

| | |
|---|---|
| Manufacture | Inmotion |
| Type | ACS4808-350F01 |
| Voltage | 48 V |

# BUY NOW

## Then Instant Download the Complete Manual

## Thank you very much!